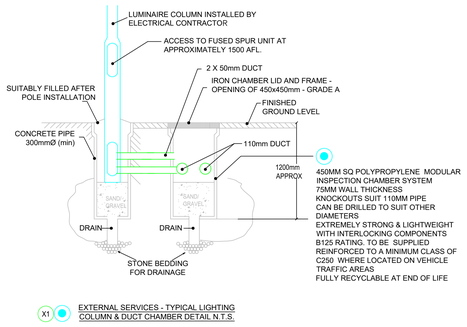

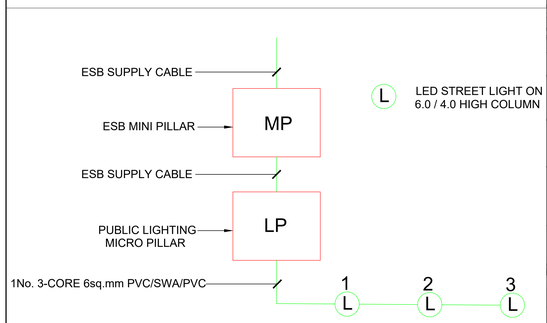

SCHEMATIC/CIRCUIT DIAGRAM

ALL DIMENSIONS SHOULD BE CHECKED ON SITE.

DO NOT SCALE FROM THIS DRAWING.

ANY DRAWING ERRORS OR DIVERGENCES SHOULD BE BROUGHT TO THE ATTENTION OF BUILDING DESIGN PARTNERSHIP AT THE ADDRESS SHOWN BELOW.

NOTES

1. DRAWING TO BE READ IN CONJUNCTION WITH ALL OTHER DRAWINGS AND DOCUMENTATION.

2. CO-ORDINATE MECHANICAL AND ELECTRICAL SERVICES AND THEIR CO-ORDINATION WITH ALL OTHER BUILDING ELEMENTS PRIOR TO INSTALLATION.

3. THIS DRAWING IS SCHEMATIC IN NATURE AND THE CONTRACTOR SHALL PROVIDE ALL BENDS, TEES, CROSS-OVERS, THAT ARE REQUIRED TO MEET THE CURRENT STANDARDS.

4. CO-ORDINATE ALL WORKS AND ENSURE DRAW PITS, ACCESS CHAMBERS ETC ARE APPROPRIATE FOR THE THEIR CONTENT PRIOR TO THEIR INSTALLATION.

5. LIGHTING NEAR RESIDENTIAL AREAS SHALL BE EQUIPPED WITH PROTECTIVE LOUVERS TO REDUCE EXCESSIVE BRIGHTNESS AND PREVENT GLARE FROM AFFECTING THE HOUSES.

E3 E3 E3 E3	RED 125mm ESB uPVC DUCTING
E3 E3 E3 E3	RED 125mm ESB uPVC DUCTING (Existing to be removed)
E3 E3 E3 E3	EXISTING OVERHEAD ESB LINES (Rating as Noted)
LV - 3L LV - 3L	110mm LV DUCTING
ELV - 3L ELV - 3L	110mm ELV DUCTING
COMMUNICATIONS	COMMS 2x 100mm uPVC DUCTING
	50mm PUBLIC LIGHTING DUCTING
GAS GAS GAS	NATURAL GAS
LPG LPG LPG	LPG
RAINWATER RAINWATER	RAINWATER PIPE & 2No. 50mm DUCTS TO PLANTROOM
G/M	GAS METER
	900mm SQ DEEP PRE-CAST CONCRETE MANHOLE WITH LOCKABLE CAST IRON LID
	J84 TYPE MANHOLE C/W LOCKABLE CAST IRON LID
	IN-GROUND WEATHERPROOF JUNCTION BOX
X1	LED STREET LIGHT FITTING C/W 6.0 METER HINGED TUBULAR STEEL COLUMN
X2	LED STREET LIGHT FITTING C/W 4.0 METER HINGED TUBULAR STEEL COLUMN
X3	DECORATIVE LED STREET LIGHT FITTING C/W 3.0 METER HINGED TUBULAR STEEL COLUMN
PL	LOCAL COUNTY COUNCIL PUBLIC LIGHT CONTRACTOR TO LIAISE WITH LOCAL CO CO TO CONFIRM EXACT SPECIFICATION OF LUMINAIRE
	ESB UNIT SUB & ASSOCIATED OFF-LOADING SWITCHGEAR
	ESB / SITE LIGHTING MINI PILLAR
	EXISTING ESB/ERCOM POLE
EV	DUAL EV CHARGER. LOCAL MINI AND MICRO PILLAR INCLUDED

REVISION - DESCRIPTION	DRAWN	CHECKED	DATE
P03 - PLANNING ISSUE	SN	SS	18/12/2024
P02 - PLANNING ISSUE	SN	SS	15/03/2024
P01 - DRAFT ISSUE	SN	SS	26/02/2024

BDP.

Blackhall Green
Dublin 7
Ireland
T +353 (0)1 474 0600
www.bdp.com

HILL STREET, DUNDALK

PROPOSED EXTERNAL LIGHTING SHEET 2 OF 2

SCALE @ A0: 1:250

DATE: MAR '24

PROJECT NUMBER: P3003835

ORIGINATOR: (6-)E003

REVISION: P03